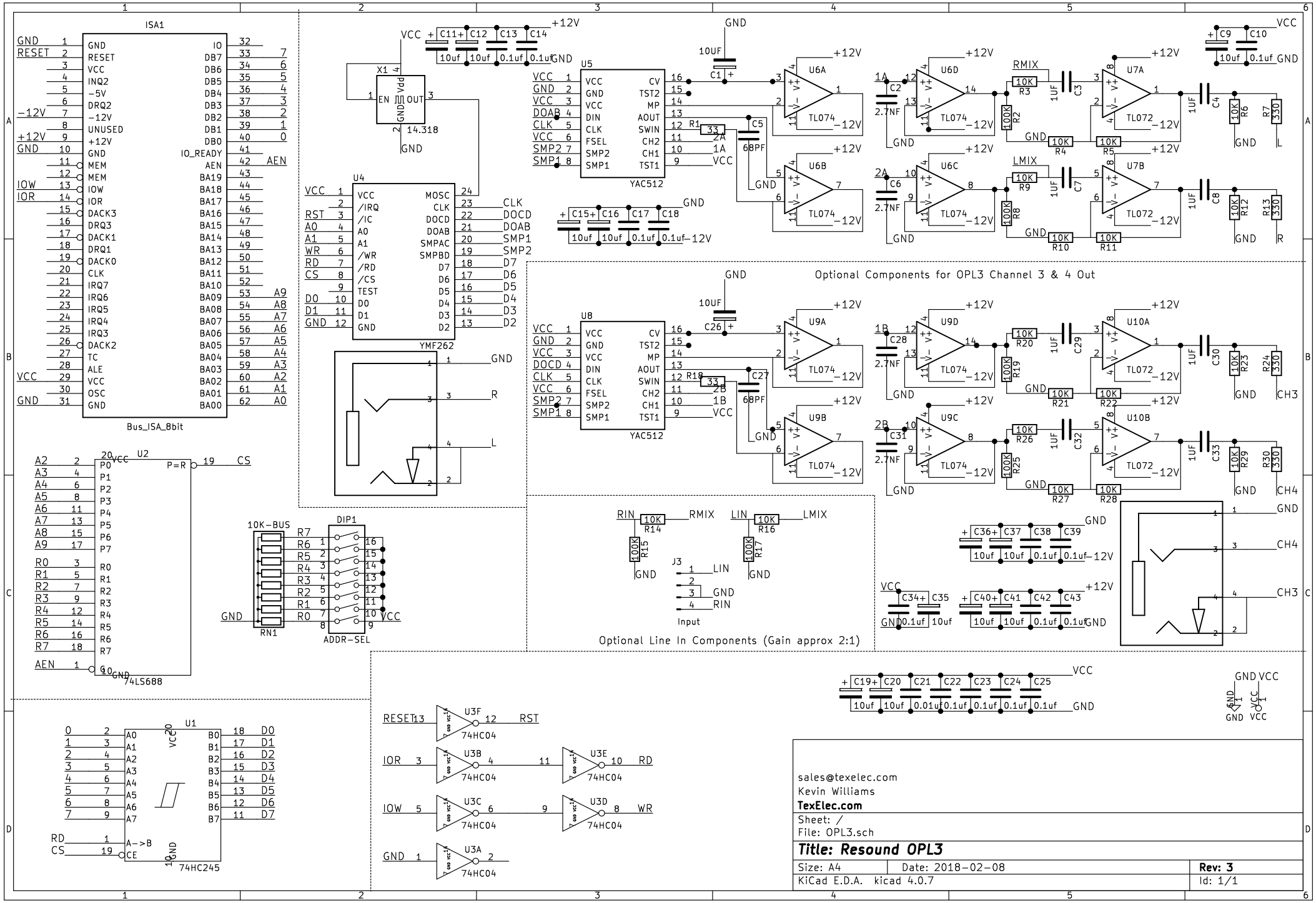
ISA1
Bus_ISA_8bit
U2
74LS688
U1
74HC245
U4
YMF262
U5
YAC512
U8
YAC512
X1
14.318
U6A
U6B
U6C
U6D
U7A
U7B
U9A
U9B
U9C
U9D
U10A
U10B
TL074
TL072
RMIX
LMIX
Optional Components for OPL3 Channel 3 & 4 Out
Optional Line In Components (Gain approx 2:1)
J3
Input
10K-BUS
RN1
DIP1
ADDR-SEL
U3F
U3B
U3C
U3A
U3E
U3D
74HC04
RESET
IOR
IOW
RST
RD
WR
sales@texelec.com
Kevin Williams
TexElec.com
Sheet: /
File: OPL3.sch
Title: Resound OPL3
Size: A4
Date: 2018-02-08
Rev: 3
KiCad E.D.A. kicad 4.0.7
Id: 1/1